Installation instructions for Glass/Glass and Wall/Glass mounting

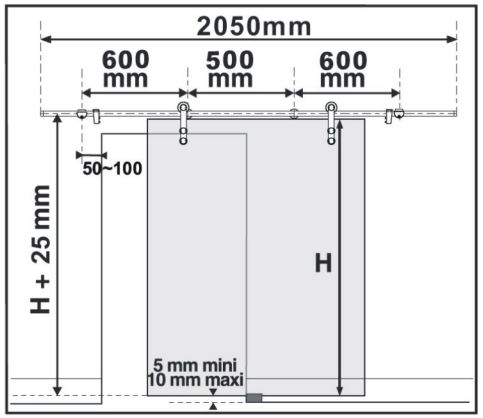

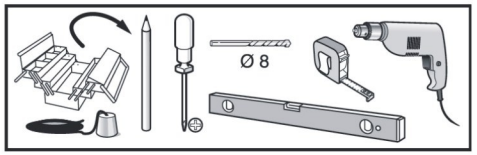

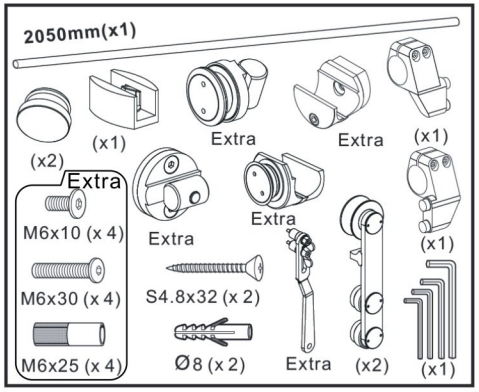

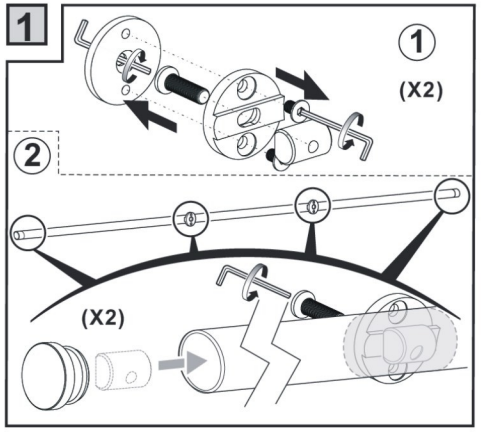

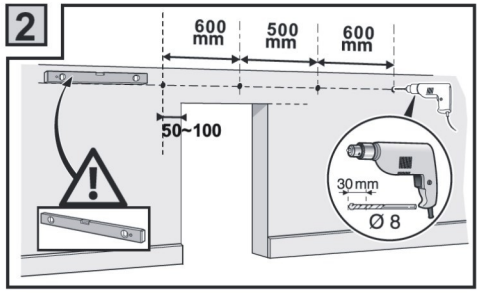

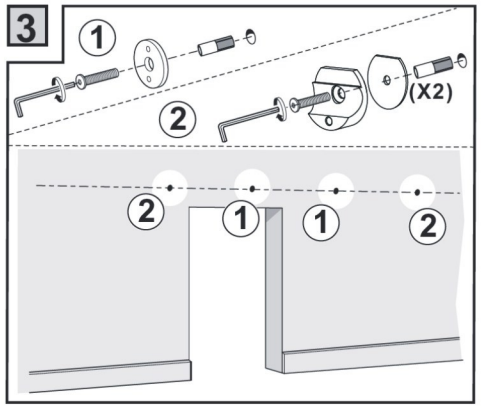

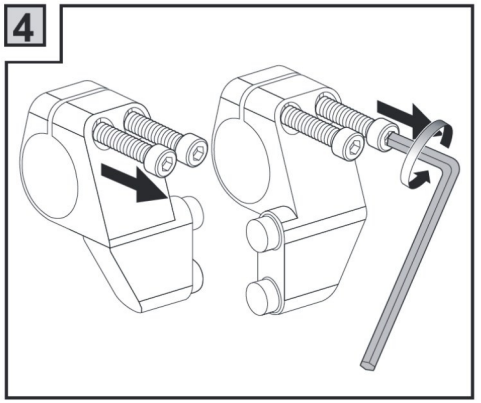

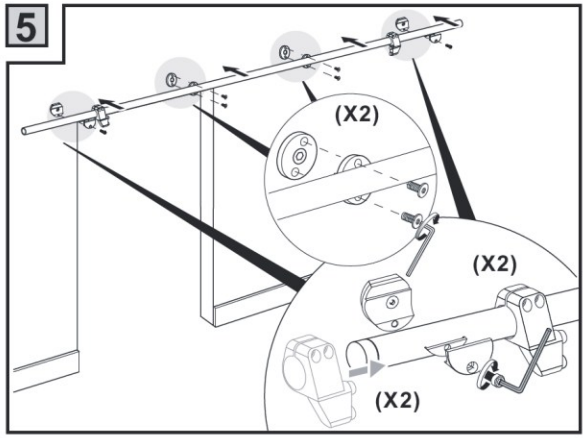
5
(X2)
(X2)
(X2)

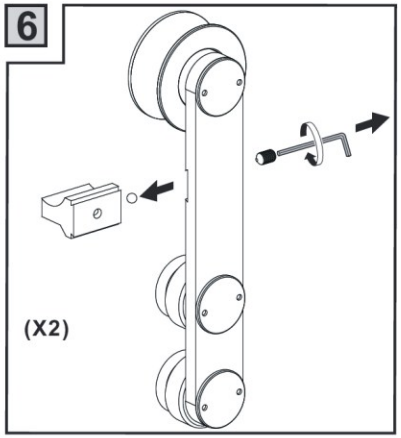
6
(X2)

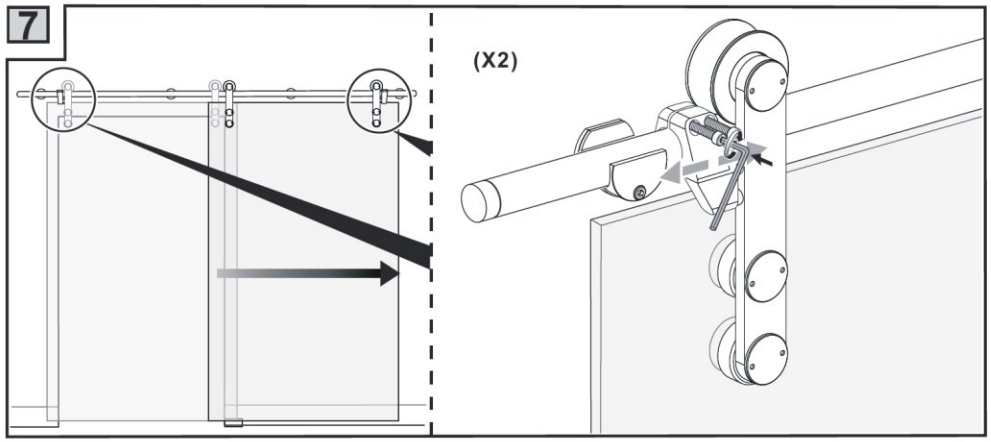
7
(X2)

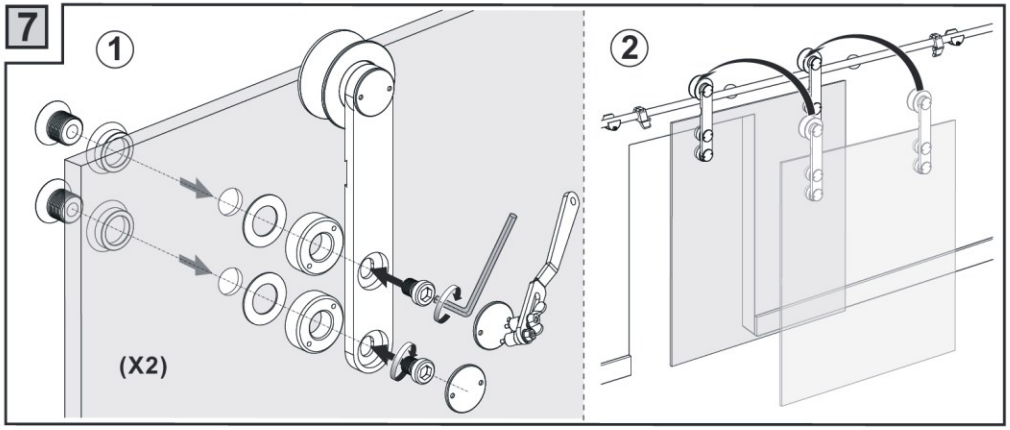
7
1
(X2)
2

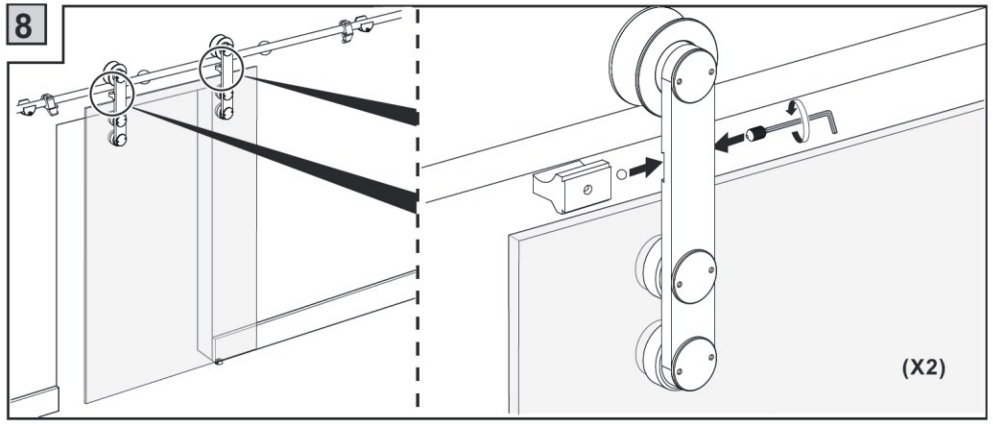
8
(X2)

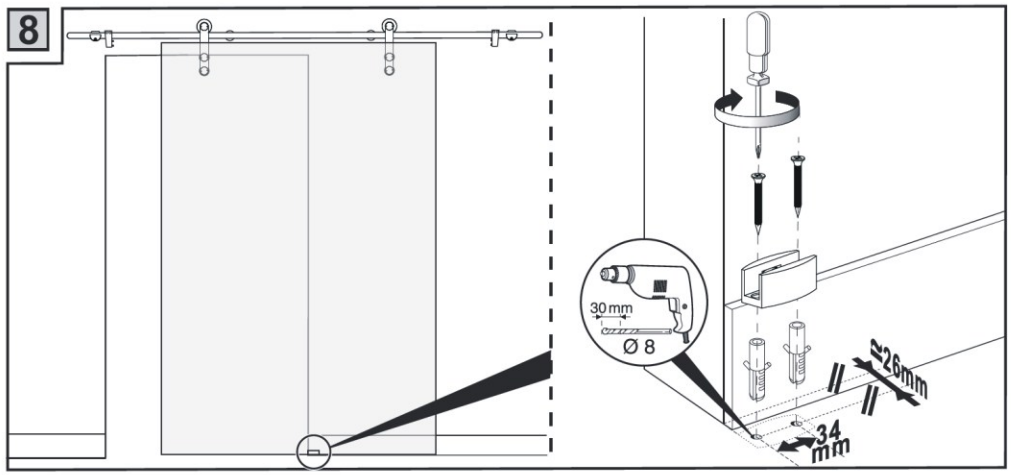
8
30mm
Ø 8
≈26mm
34 mm

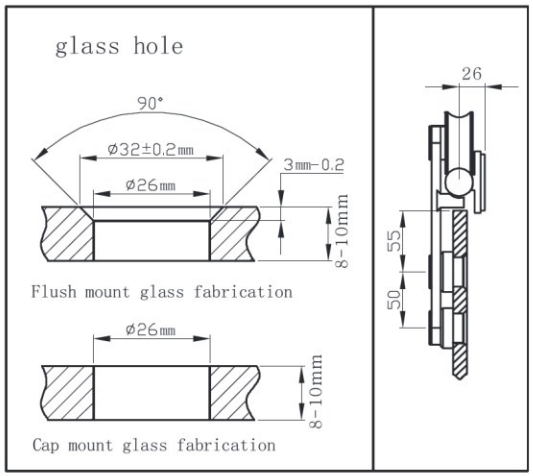
glass hole
90°
ø32±0.2mm
ø26mm
3mm-0.2
8-10mm
Flush mount glass fabrication
ø26mm
8-10mm
Cap mount glass fabrication
26
55
50